Oct.1.2025 Copyright 2025 HIROSE ELECTRIC CO., LTD. All Rights Reserved.
In case of consideration for using Automotive equipment / device which demand high reliability, kindly contact our sales window correspondents.

	COUNT	DESCRIPTION OF REVISIONS	BY	CHKD	DATE		COUNT	DESCRIPTION OF REVISIONS	BY	CHKD	DATE
△					. .	△					. .
△						△					. .
△					. .	△					. .

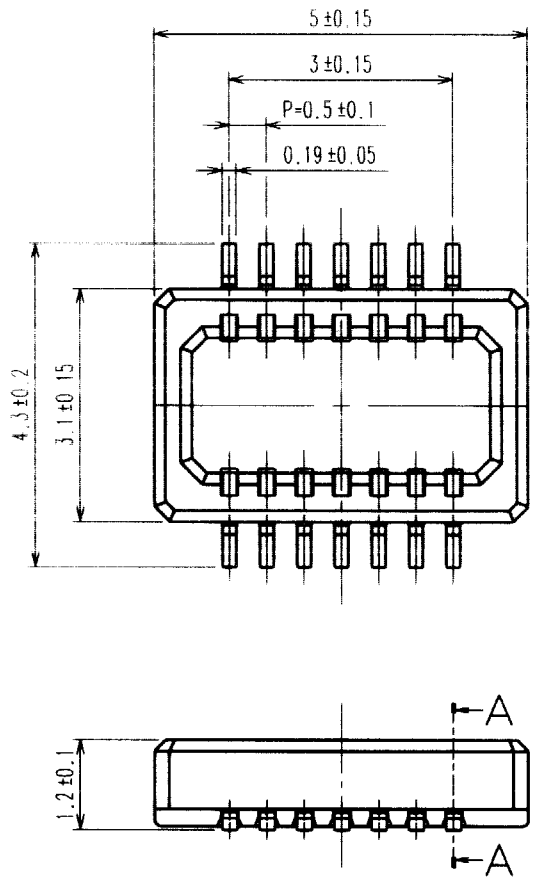

Fig.1 : RECOMMENDED PATTERN

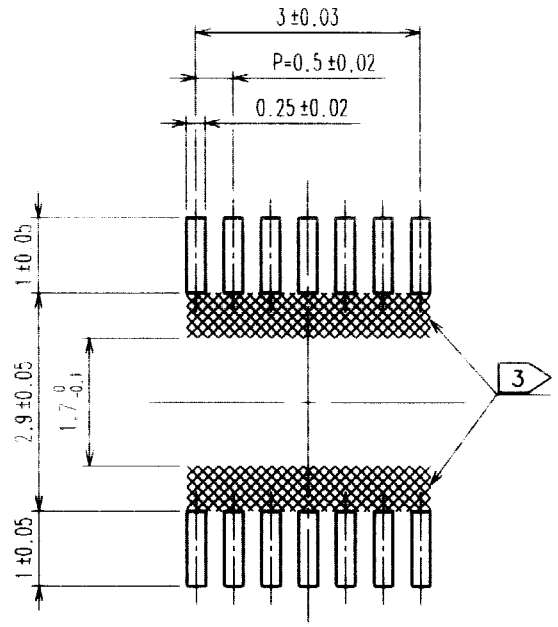

Fig.2 : PLATING SPECIFICATION (40:1)

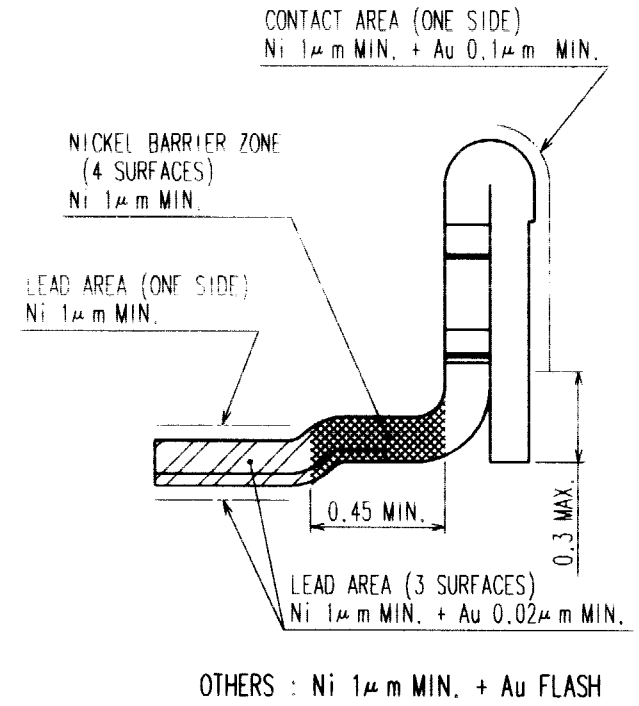

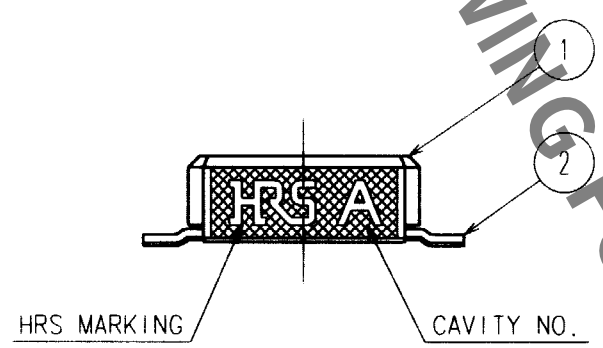

Fig.3 : A-A CROSS SECTION VIEW

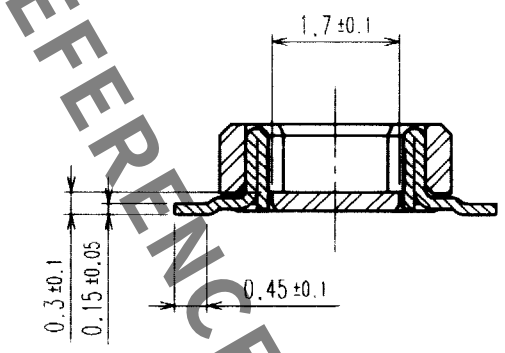

Fig.4 : MATING VIEW

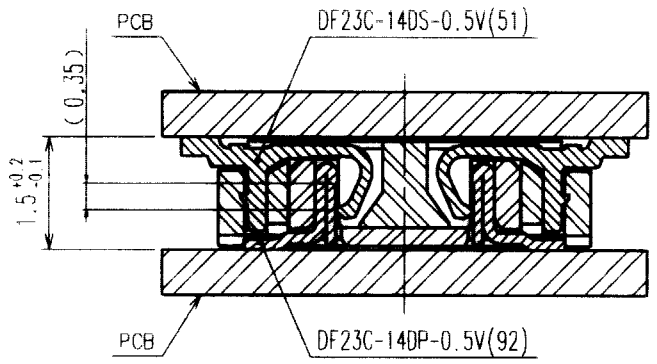

HRS DRAWING FOR REFERENCE

NOTES 1 LEAD CO-PLANARITY SHALL BE 0.1mm MAX.
2 REFER TO Fig.2
3 WHEN A PART MARKED WITH ▒ HAS A PATTERN BUT NO RESIST ON IT, TAKE CARE TO PREVENT THE CONNECTOR FROM TOUCHING IT.

NO.	MATERIAL	FINISH, REMARKS	NO.	MATERIAL	FINISH, REMARKS
2	PHOSPHOR BRONZE	2	4	POLYESTER	CLEAR
1	LCP	BLACK,UL94V-0	3	PS	CLEAR

CODE NO.(OLD)	DRAWN	DESIGNED	CHECKED	APPROVED	RELEASED
	T.Yamamoto '03.10. 1	T.Yamamoto '03.10.2	K.Akiyama '03.10.2	K.Akiyama '03.10.2	. .

SCALE 10 : 1	DRAWING NO. EDC3-163722-02	PART NO. DF23C-14DP-0.5V(92)
UNITS mm	HRS HIROSE ELECTRIC CO., LTD	CODE NO. CL688-0800-5-92
		1/2

TO

Oct.1.2025 Copyright 2025 HIROSE ELECTRIC CO., LTD. All Rights Reserved.
In case of consideration for using Automotive equipment / device which demand high reliability, kindly contact our sales window correspondents.

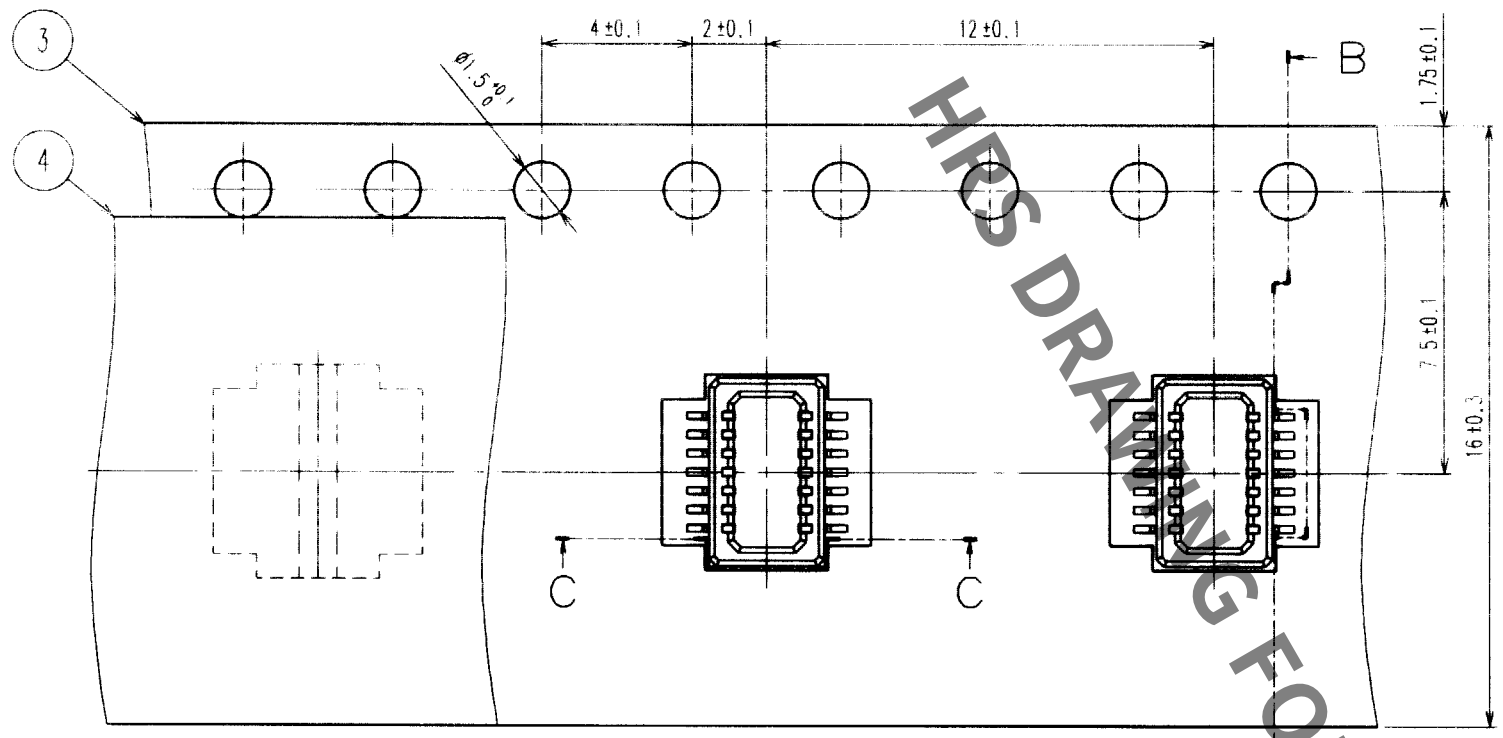

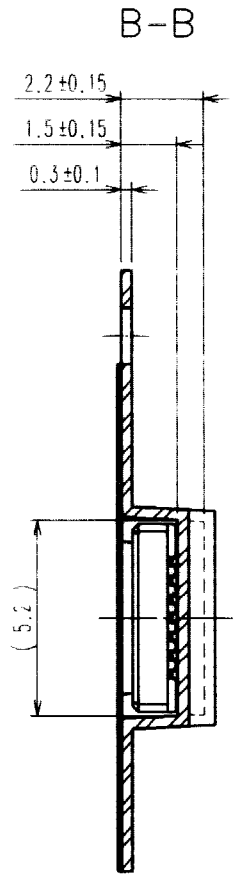

Fig.6 : REEL DIMENSIONS (FREE)

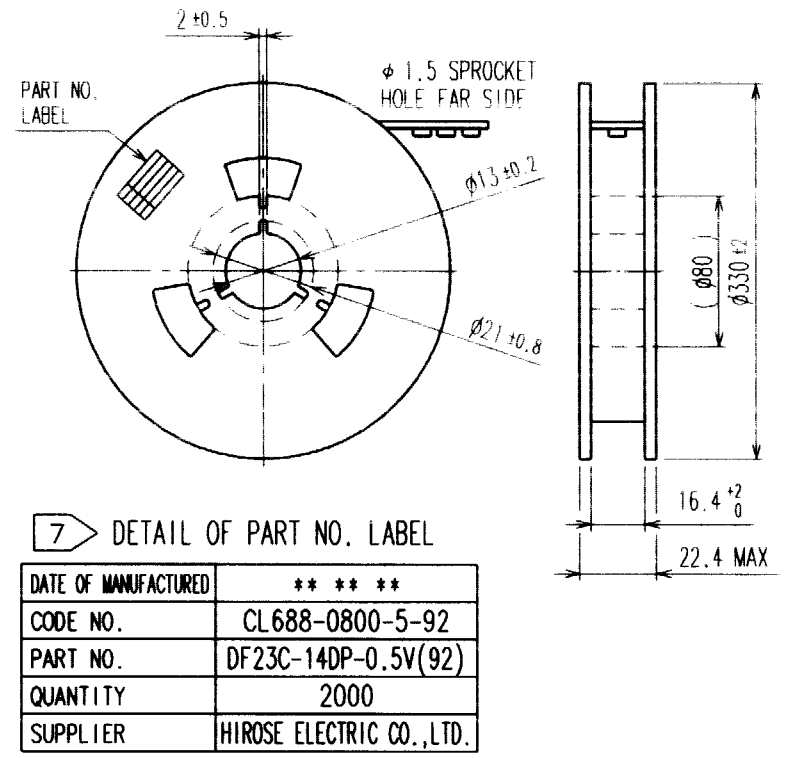

7 DETAIL OF PART NO. LABEL

DATE OF MANUFACTURED	** ** **
CODE NO.	CL688-0800-5-92
PART NO.	DF23C-14DP-0.5V(92)
QUANTITY	2000
SUPPLIER	HIROSE ELECTRIC CO.,LTD.

DIRECTION OF UNREELING

C-C

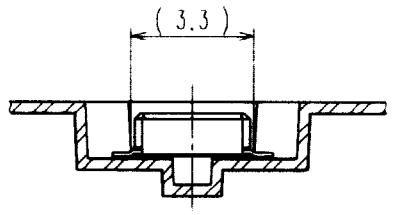

Fig.6 : PACKAGING SPECIFICATION (FREE)

6 Fig.5 : TAPING

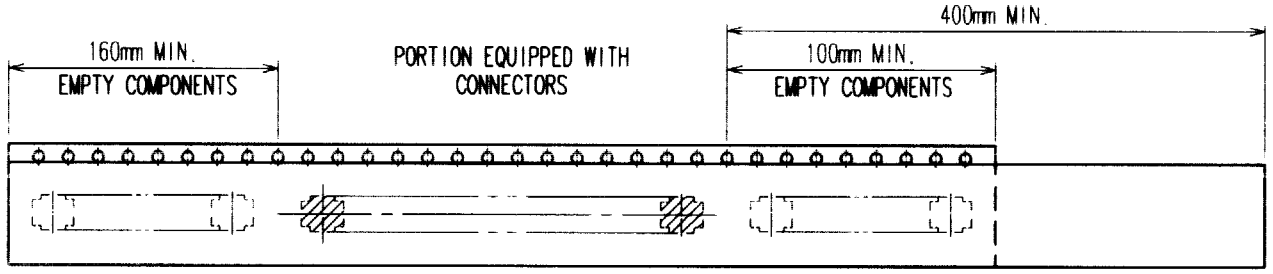

TRAILER

LEADER

PACKAGING DIMENSION

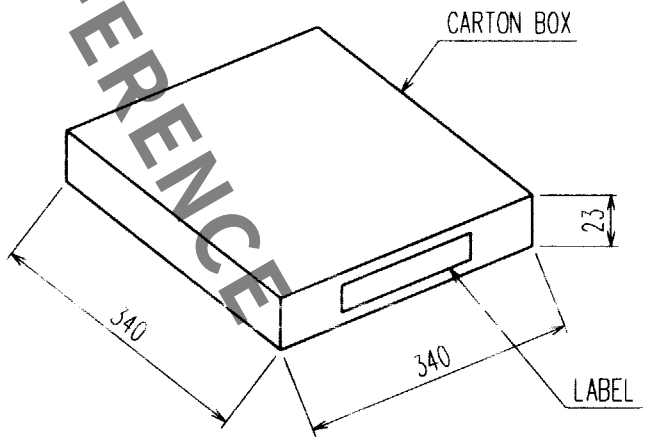

DETAIL OF LABEL

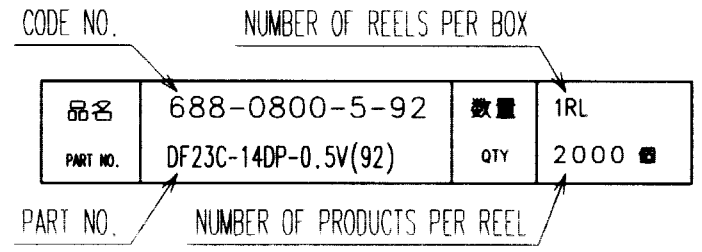

NOTES 4 PER REEL 2000 CONNECTORS
5 THE DIMENSIONS IN PARENTHESES ARE FOR REFERENCE.
6 REFER TO JIS C 0806
(PACKAGING OF COMPONENTS FOR AUTOMATIC HANDLING)
7 DETAIL OF PART NO. LABEL IS WRITTEN IN JAPANESE.

TO

CODE NO.(OLD)	DRAWN	DESIGNED	CHECKED	APPROVED	RELEASED
	T.Yamamoto '03.10. 1	T.Yamamoto 03.10 2	K.Akiyama '03.10.2	K.Akiyama '03.10.2	

SCALE 5 : 1	DRAWING NO. EDC3-163722-02	PART NO. DF23C-14DP-0.5V(92)
UNITS mm	HRS HIROSE ELECTRIC CO., LTD	CODE NO. CL688-0800-5-92

2

HRS DRAWING FOR REFERENCE