Alle Rechte vorbehalten/ *All rights reserved*

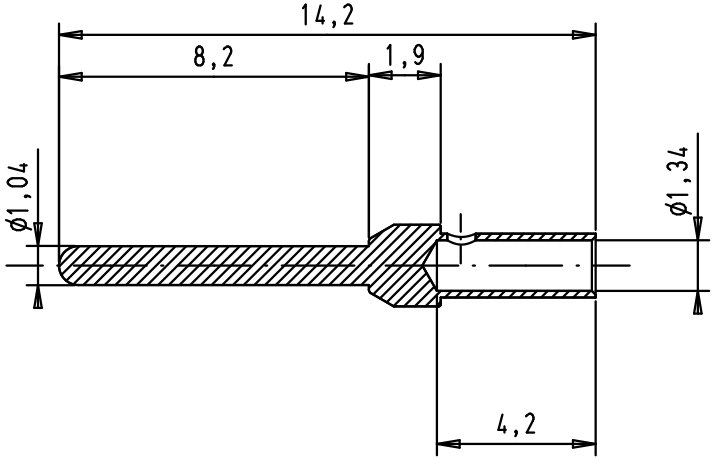

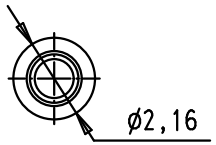

Crimping of AWG 18-22 : hand tool 09 99 000 0501
and locator 09 99 000 0531

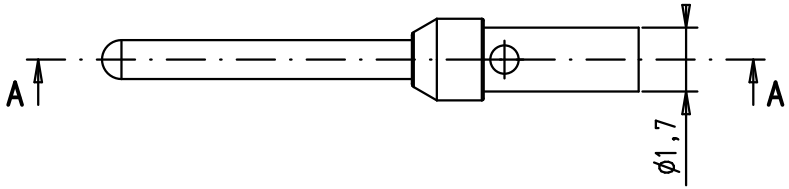

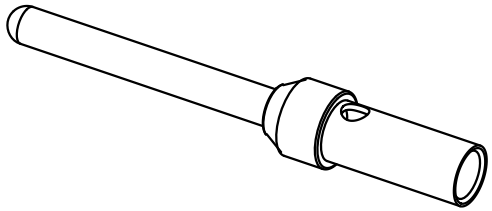

Bulk packaging	Part number	Gold plating (over nickel)
5000	09 67 000 3576 580	PL1
100	09 67 000 3576	PL1

Mod.	Dat.	Name
EC04018	07/11/11	SD
EC01739	29apr2010	LP
EC01656	12apr2010	LP

	Dat.	Name
Detail.	12apr2010	LP
Insp.	07/11/11	JB
Stand.		

All Dim. in mm
Orig. Size DIN A 4

HARTING EURL
F-95972 Paris

D-Sub *AWG 18-22*

male turned crimp contact

Maßstab/ *Scale* 5/1

TB09 67 000 357x

Sub.

Blatt/ *Page* 1/1