EJF-22310 Series Dimensions (Unit：mm)

Rated Voltage：AC125V 3A

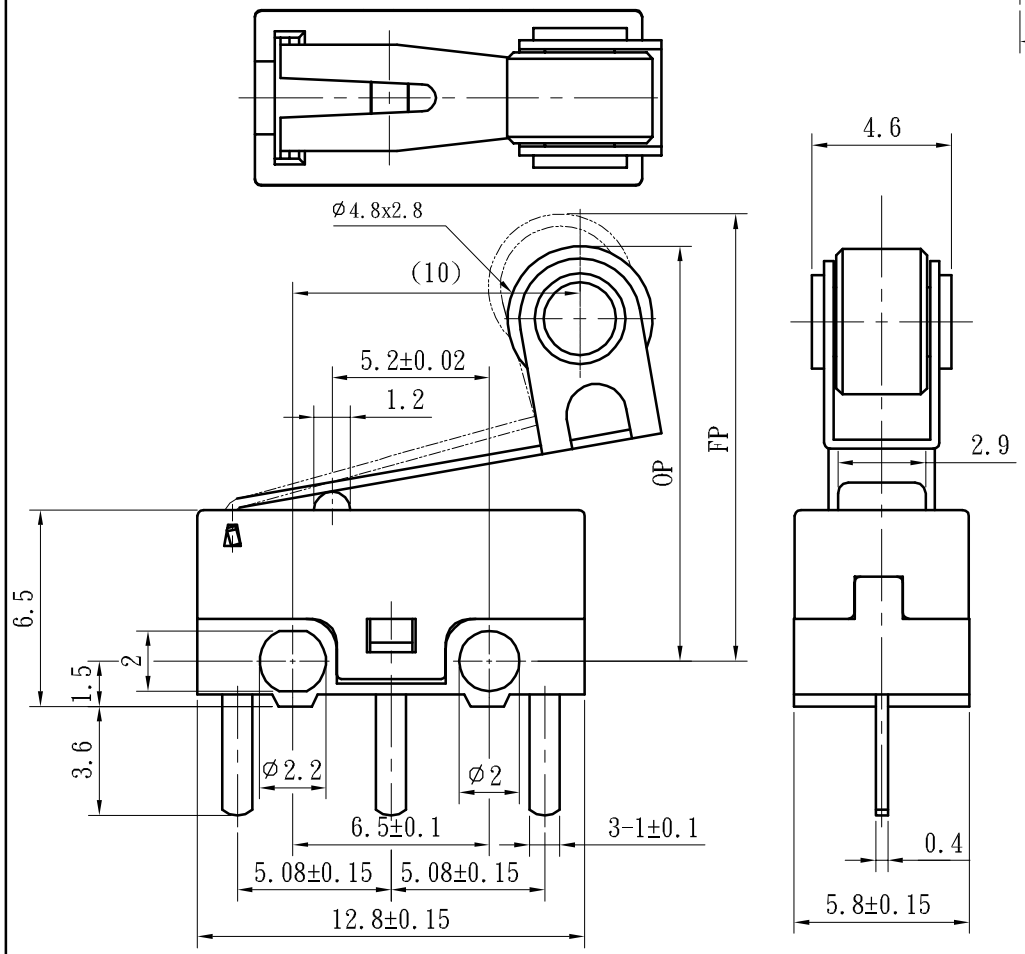

P.C.B LAYOUT:

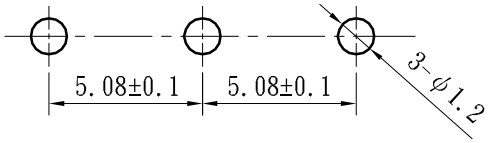

CIRCUIT DIAGRAM

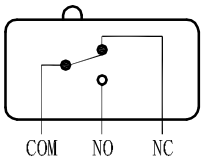

CONSTRUCTION

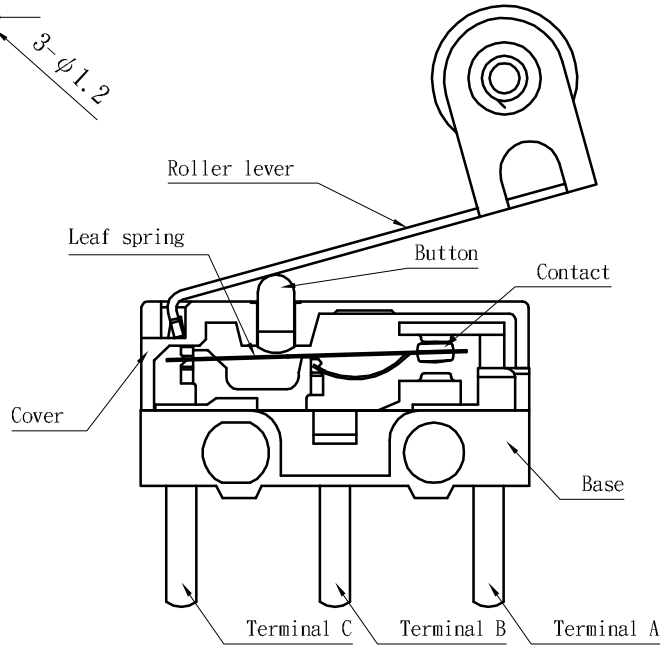

	Operating Characteristics \ Part Number	EJF-22310
1.	Operating Force (OF)	80gf (0.78N) Max.
2.	Release Force (RF)	5gf (0.05N) Min.
3.	Free Position (FP)	16.5mm Max.
4.	Movement Differential (MD)	0.5mm Max.
5.	Operating Position (OP)	13±2.0mm

NO.	DETAILS	ALTERED BY	DATE

NORMAL TOLERANCE	
RANGE	TOLERANCE
0-1	±0.1
1-4	±0.3
4-16	±0.5
16-63	±0.8
63-250	±1.0

EXCEL CELL ELECTRONIC CO., LTD.

CHECK	GARY	DESIGN	TIM	DRAWN	TIM	UNIT	MM (INCH)	PART NAME	EJF
						SCALE	4:1	TYPE	
						SIZE	A4	FILE NAME	
						PROJECTION		EDITION	

PART NUMBER: EJF2231000