CLIFF

SMD DC SOCKETS

Designed for surface mounting assembly. Available as discrete or taped / reeled parts. Characteristics are similar to our versions with through hole legs. Supplied loose (STD) or taped in 1000 / Reel (to order).

Specification (All models)

Insertion / Withdrawal force: 0.3 - 2.0 kgf
Contact Resistance:
(4 terminal method 1KHz @ <100mA)

Initial - Plug / Contact	<50mΩ
Contact / Shunt	<30mΩ
After life test - Plug / Contact	<100mΩ
Contact / Shunt	<60mΩ
Electrical Rating:	DC10 - 2A / 12V
	DC8 - 1A / 12V

DC-8S 1.3mm Pin

Part No. FC68145S
Taped FC68145ST

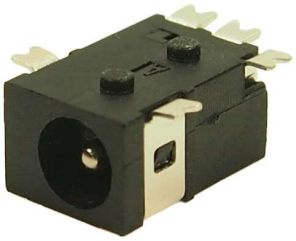

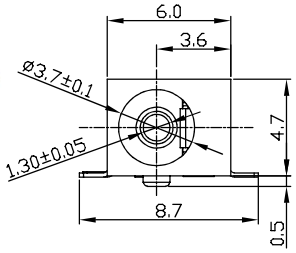

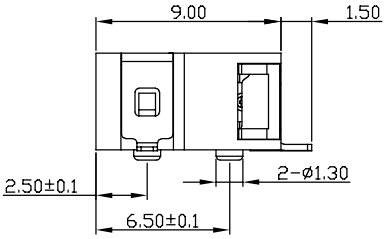

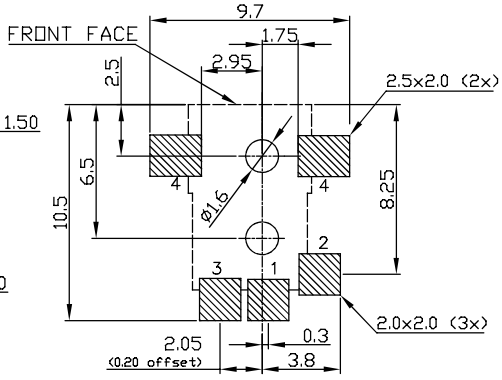

PCB LAYOUT
TOP VIEW

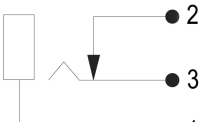

DC-10AS 2.1mm Pin
DC-10BS 2.5mm Pin

Part No. FC68148S
Part No. FC68149S
Add Suffix 'T' for taped.

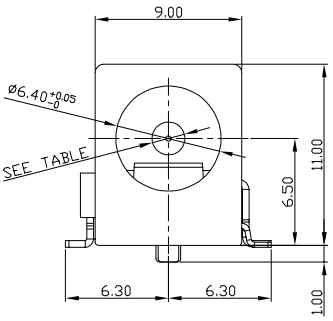

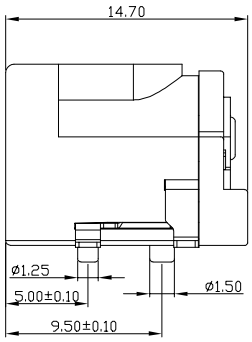

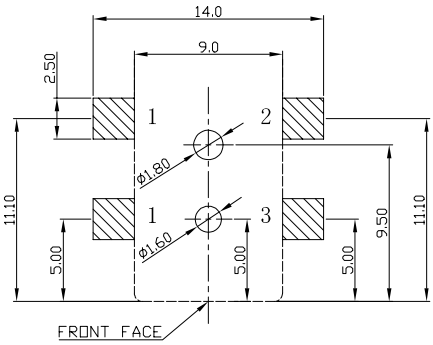

PCB LAYOUT
(TOP VIEW)

© CLIFF 05/2025 ISS.6

For further information, contact sales@cliffuk.co.uk

Cliff Electronic Components Limited,
76 Holmethorpe Avenue, Holmethorpe Ind. Estate,
Redhill, Surrey RH1 2PF U.K.
Tel: +44 (0)1737 771375 Fax: +44 (0)1737 766012

www.cliffuk.co.uk

✓RoHS