RACM65S-K/277 Series ◊ AC/DC Power Supply

65W ◊ Input: 100V-277VAC

RECOM
AC/DC Converter

FEATURES

- Extended input: 90-305VAC
- 65 watts with 11 W/in³ or 20 W/in³ density
- OVC III up to 3000 or 5000m altitude
- Thermally effective baseplate on 1.5 x 3 inch footprint
- THT solder module on 1.5 x 2 inch; P12+ pinning
- No-load power <100mW; Efficiency: 90% plus
- Safety ratings up to 90 °C operating temperature
- Print module EMI: EN55032 “B” @ floating loads only
- Open brick: EN55032 “B” incl. earth referenced load
- 3 year warranty

THT: 52.5 x 40.0 x 25.5mm (2.06 x 1.57 x 1.0 inch)
OIB: 79.0 x 40.8 x 31.0mm (3.11 x 1.60 x 1.22 inch)
EIB: 79.0 x 40.8 x 32.0mm (3.11 x 1.60 x 1.26 inch)

APPLICATIONS

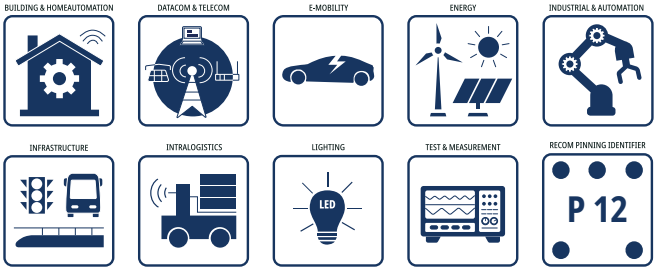

SAFETY & EMC

Reach compliant
RoHS² compliant 10 from 10
c UL us E224736
IECEE CB SCHEME
HOUSEHOLD CERTIFIED EN-60335-1

DESCRIPTION

RACM65S-K/277 are the new benchmark in power density for low power AC-DC power supplies with over 90% efficiency over a load range of 6 to 65 watts. Two different mounting options as encapsulated solder mount modules on industry standard P12 pinning at 20 W/in³ or in an open chassis mount structure with optional cover on a 1.5”x3” footprint with 31 mm overall height. International safety approvals according to medical, household and industrial standards with OVC III rating up to 3000m operating altitude or up to 5000m under OVC II rating ensure worldwide use in ambient temperatures from -40 °C to 90 °C. The integrated EMC filter according to EN55032 Class “B” for floating loads in the solder modules or additionally for grounded load connections in the chassis mount modules simplify system implementation.

SELECTION GUIDE

Part Number	Input Voltage Range [VAC]	Output Voltage nom. [VDC]	Output Current nom. [A]	Efficiency (1) typ. [%]	Output Power continuous [W]
RACM65S-05SK/277 (2)	90-305	5	8	88	40
RACM65S-12SK/277 (2)	90-305	12	5.42	91	65
RACM65S-15SK/277 (2)	90-305	15	4.34	91	65
RACM65S-24SK/277 (2)	90-305	24	2.71	90	65
RACM65S-36SK/277 (2)	90-305	36	1.81	91	65
RACM65S-48SK/277 (2)	90-305	48	1.35	91	65
RACM65S-52SK/277 (2)	90-305	52	1.25	91	65

Note1: Efficiency is tested at 230VAC and full load at +25°C ambient

copyright © RECOM Power GmbH, all rights reserved

RECOM
AC/DC Converter

MODEL NUMBERING

RACM65S-__ SK/277/__

- nom. Output Power
- Output Voltage
- **S**ingle
- Mechanical Options [2]

Note2: "/277" only= THT-solder mount, encapsulated, potted
add suffix "/OIB" open frame with isolating base
add suffix "/EIB" for enclosed case with isolating base

ORDERING INFORMATION

Model	Output Voltage	Package Type		
		2.06" x 1.57" THT-solder mount	3.11" x 1.6" open frame with isolating base "/OIB"	3.11" x 1.6" enclosed with isolating base "/EIB"
RACM65S-05SK/277	5VDC	y	y	y
RACM65S-12SK/277	12VDC	y	y	y
RACM65S-15SK/277	15VDC	y	y	y
RACM65S-24SK/277	24VDC	y	y	y
RACM65S-36SK/277	36VDC	y	y	y
RACM65S-48SK/277	48VDC	y	y	y
RACM65S-52SK/277	52VDC	y	y	y

y= standard portfolio; on request= MOQ may apply on project base

BASIC CHARACTERISTICS (measured @ T_{AMB}= 25°C, nom. V_{IN}, full load and after warm-up unless otherwise stated)

Parameter	Condition		Min.	Typ.	Max.
Nominal Input Voltage	50/60Hz		100VAC		277VAC
Operating Range [3]	47-63Hz		90VAC		305VAC
	DC		120VDC		430VDC
Input Current	5Vout				1.2A
	others				1.5A
Inrush Current	cold start at 25°C	115VAC			25A
		230VAC			50A
		277VAC			60A
No Load Power Consumption	5Vout			100mW	200mW
	others			60mW	100mW
Ecodesign Standby Mode Use (Available output power for stated input power)	P_{IN}= 0.3W		150mW		
	P_{IN}= 0.5W		300mW		
Input Frequency Range	AC Input		47Hz		63Hz
Minimum Load			0%		
Power Factor	115VAC			0.6	
	230/277VAC			0.5	
Start-up time					200ms
Rise time					25ms
Hold-up time	230VAC	5Vout	50ms		
		others	20ms		
Internal Operating Frequency					100kHz
Output Ripple and Noise [4]	20MHz BW	5Vout			100mVp-p
		others			1% of Vout

Note3: The products were submitted for safety files at AC-Input operation. (90V-305VAC)
For DC-operation use an external, proper DC rated fuse according to related safety requirements.

Note4: Measurements are made with a 0.1µF MLCC & 10µF E-cap in parallel across output. (low ESR)
The test setup can have an impact on ripple noise values (placement of scope probe, capacitors, it's specifications, wires, PCB tracks, distances, etc.)

copyright © RECOM Power GmbH, all rights reserved

BASIC CHARACTERISTICS (measured @ T_{AMB}= 25°C, nom. V_{IN}, full load and after warm-up unless otherwise stated)

5Vout

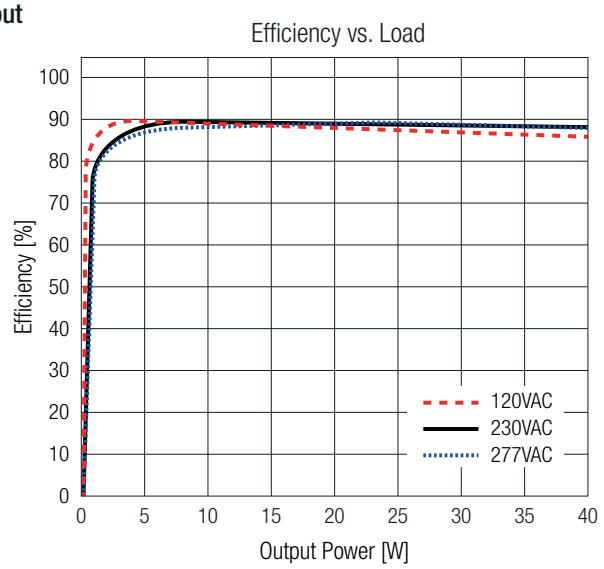

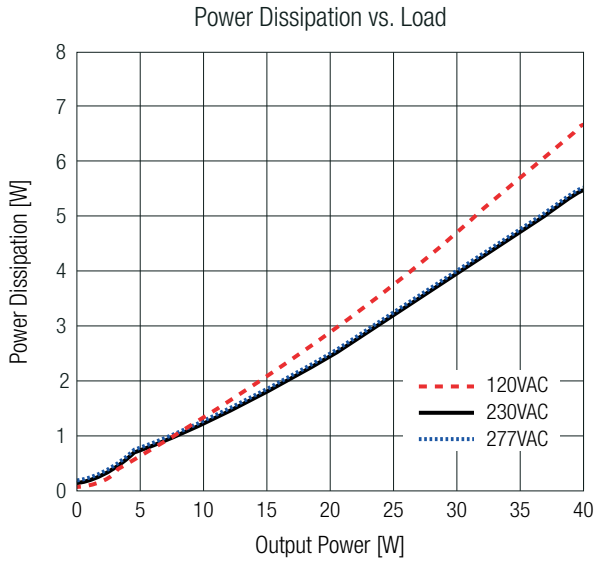

others

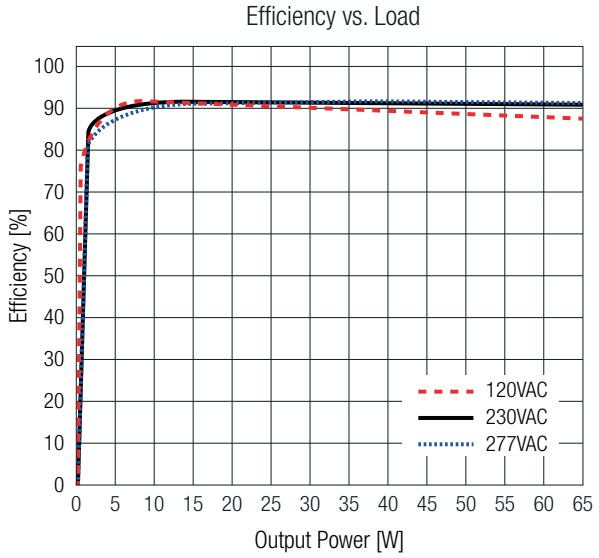

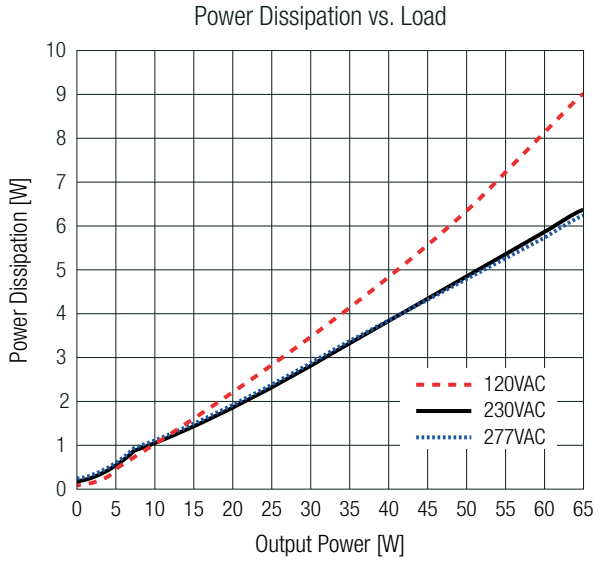

REGULATIONS (measured @ T_{AMB}= 25°C, nom. V_{IN}, full load and after warm-up unless otherwise stated)

Parameter	Condition	Value
Output Accuracy		±3.0% max.
Line Regulation	low line to high line	±1.0% max.
Load Regulation (5)	10% to 100% load	2.5% max.
Transient Response	25% load step change	1.0V max.
	recovery time	3ms max.

Note5: Operation below 10% load will not harm the converter, but specifications may not be met

PROTECTIONS (measured @ T_{AMB}= 25°C, nom. V_{IN}, full load and after warm-up unless otherwise stated)

Parameter	Type	Value
Internal Input Fuse	AC rated only	T3.15A, slow blow type
Short Circuit Protection (SCP)		hiccup mode, auto recovery
Over Voltage Protection (OVP)		105%-150%, hiccup mode
Over Current Protection (OCP)		110%-150%, hiccup mode

copyright © RECOM Power GmbH, all rights reserved

PROTECTIONS (measured @ T_{AMB}= 25°C, nom. V_{IN}, full load and after warm-up unless otherwise stated)

Parameter	Type		Value
Over Voltage Category (OVC)	according to 62368-1, 61558	all versions	OVC II (5000m)
		THT version	OVC III (5000m)
		"/OIB" & "/EIB" versions	OVC III (3000m)
DC ON LED	"/OIB" & "/EIB" versions only		green light, output voltage present
Class of Equipment			Class II
Isolation Voltage (6)	I/P to O/P	1 minute	4kVAC
Insulation Grade	I/P to O/P		reinforced
Isolation Resistance	V_{ISO}= 500VDC		1GΩ min.
Isolation Capacitance			100pF typ.
Means of Protection	I/P to O/P		2MOPP
Medical Device Classification	built-in power supply		designed to support type BF applications
Touch Current	304.7VAC/63Hz	normal condition	<100µA
		single fault	<500µA

Note6: For repeat Hi-Pot testing, reduce the time and/or the test voltage

ENVIRONMENTAL (measured @ T_{AMB}= 25°C, nom. V_{IN}, full load and after warm-up unless otherwise stated)

Parameter	Condition			Value
Operating Ambient Temperature Range	with derating			-40°C to +90°C
Maximum Case Temperature				+110°C
Temperature Coefficient				±0.03%/K
Operating Altitude	according to 62368-1, 61558		all versions	5000m (OVC II)
			THT version	5000m (OVC III)
			"/OIB" & "/EIB" versions	3000m (OVC III)
Operating Humidity	non-condensing			90% RH max.
Pollution Degree	according to 60335		THT version	PD1
			"/OIB" & "/EIB" versions	PD2
Shock				5-500Hz, 20m/s² 15 min for each axis
MTBF	according to MIL-HDBK-217, G.B.; T_{AMB}= +25°C			450 x 10³ hours
Design Lifetime	230VAC and full load	T_{AMB}= +25°C	5, 12 & 15Vout	100 x 10³ hours
			24 & 36Vout	75 x 10³ hours
			48 & 52Vout	60 x 10³ hours
		T_{AMB}= +50°C	5, 12 & 15Vout	20 x 10³ hours
			24 & 36Vout	15 x 10³ hours
			48 & 52Vout	11 x 10³ hours

Convection cooled rating @ still air <0.1m/s (7)

THT-solder mount Versions

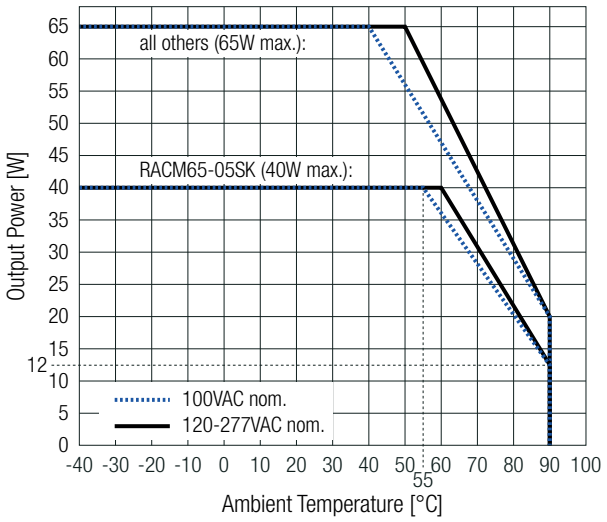

5, 12, 15, 36, 48, 52Vout "/OIB" Version

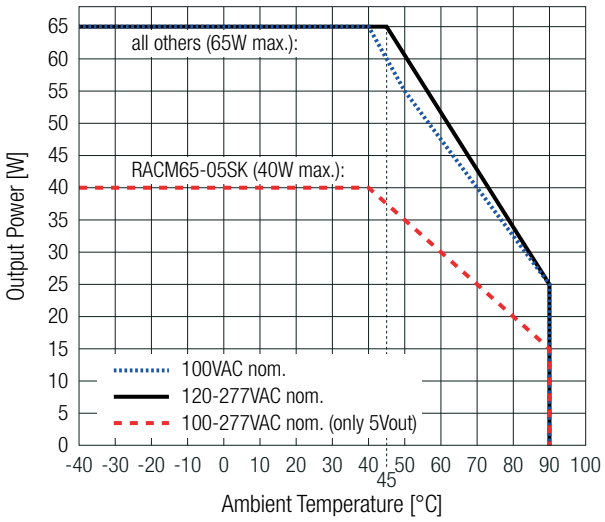

copyright © RECOM Power GmbH, all rights reserved

ENVIRONMENTAL (measured @ T_{AMB}= 25°C, nom. V_{IN}, full load and after warm-up unless otherwise stated)

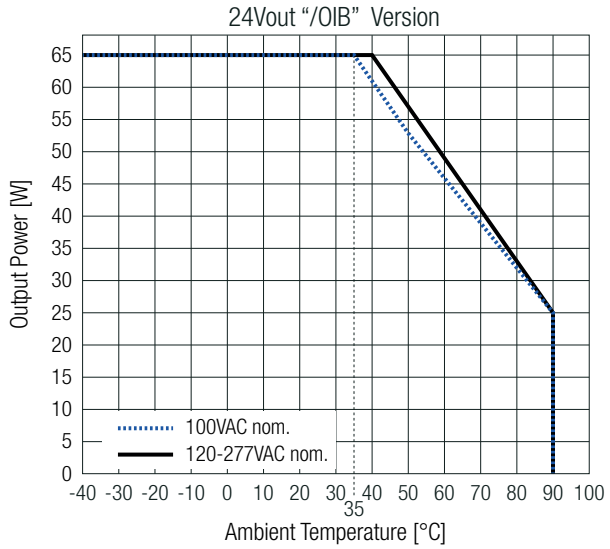

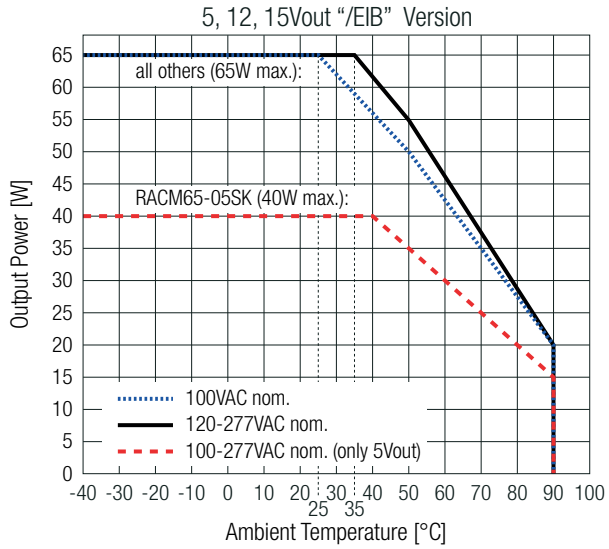

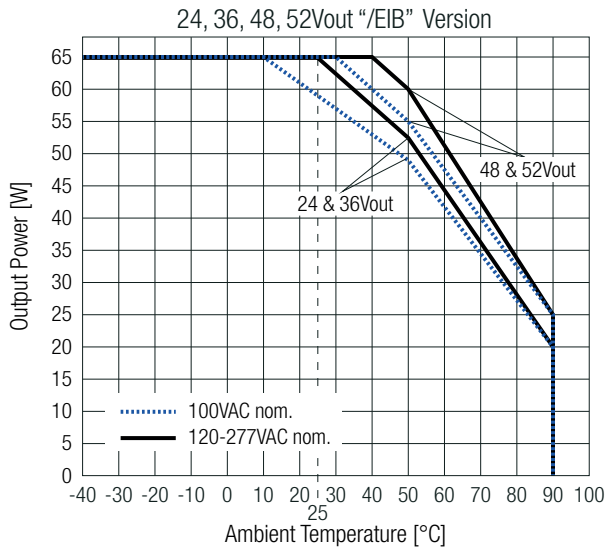

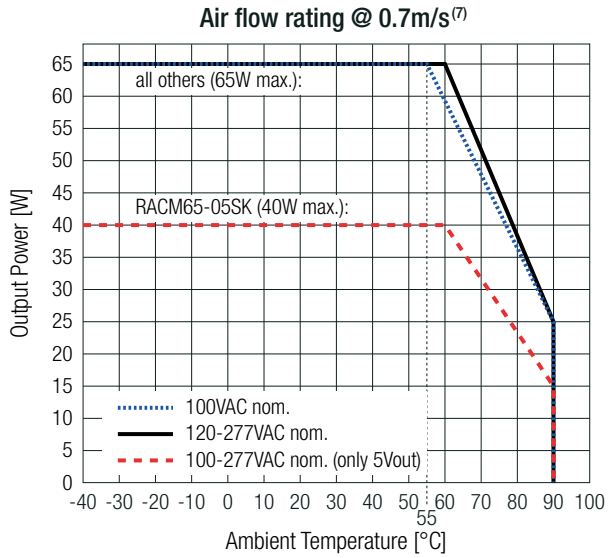

Note7: "VAC nom." values include ±10% tolerance

ENVIRONMENTAL (measured @ T_{AMB}= 25°C, nom. V_{IN}, full load and after warm-up unless otherwise stated)

Preferred ventilation direction
valid for "/OIB" and /EIB"

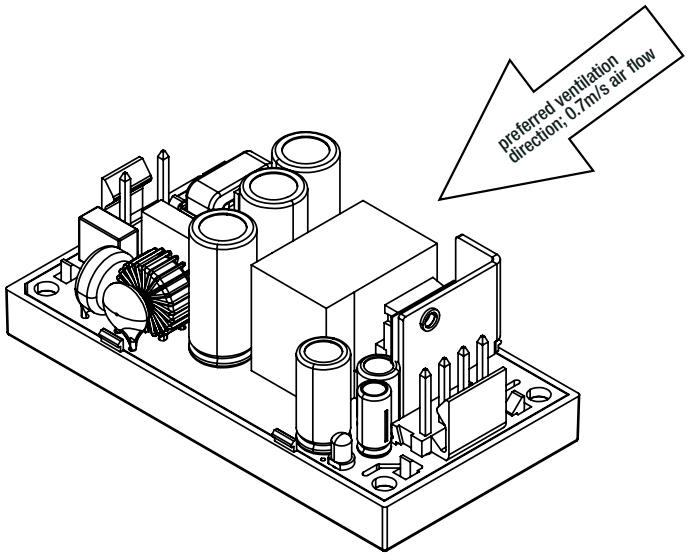

copyright © RECOM Power GmbH, all rights reserved

SAFETY & CERTIFICATIONS

Certificate Type (Safety)	Report Number	Standard
Audio/Video, information and communication technology equipment - Part1: Safety requirements 3rd Edition	E491408-A6044-UL	UL62368-1:2019 3rd Edition
		CAN/CSA-C22.2 No. 62368-1-19 3rd Edition
Audio/Video, information and communication technology equipment - Part1: Safety requirements 3rd Edition	241213015	IEC62368-1:2018 3rd Edition
		EN IEC 62368-1:2020+A11:2020
Medical electrical equipment Part 1: General requirements for basic safety and essential performance	241213014	IEC60601-1:2005+AM2:2020 Edition 3.2
Household and similar electrical appliances – Safety – Part 1: General requirements	64.110.24.06952.01	IEC60335-1:2010 + C1:2016 5th Edition
		EN60335-1:2012+ A15:2021
Safety of power transformers, power supplies, reactors and similar products for supply voltages up to 1100 V 3rd Edition	085-240695101-000	IEC61558-1:2017 3rd Edition
Safety of power transformers, power supplies, reactors and similar products for supply voltages up to 1100 V Part 2: Particular requirements		IEC61558-2-16:2009+A1:2013 1st Edition
RoHS2		RoHS-2011/65/EU + AM-2015/863

EMC Compliance according to EN55032	Condition	Standard
Electromagnetic compatibility of multimedia equipment – Emission Requirements	All Versions without external filter under floating load THT-print-mount version plus **„external filter“** under earth coupled load	EN55032:2015+A11:2020

EMC Compliance according to EN61204-3	Condition	Standard
Low voltage power supplies, d.c. output Part 3: Electromagnetic compatibility (EMC)		EN IEC 61204-3:2018
ESD Electrostatic discharge immunity test	Air: ±2, 4, 8kV Contact: ±4kV	IEC61000-4-2:2008, Criteria A EN61000-4-2:2009, Criteria A
Radiated, radio-frequency, electromagnetic field immunity test	10V/m (80-1000MHz), 3V/m (1400-2000MHz), 1V/m (2000-2700MHz	IEC/EN61000-4-3:2006 + A2:2010, Criteria A
Fast Transient and Burst Immunity	AC Port: L, N, L-N: ±2kV	IEC/EN61000-4-4:2012, Criteria A
Surge Immunity	valid for THT versions: AC Port without Filter: ±1kV L-N; ±2kV L-PE & N-PE AC Port with Filter: ±2kV L-N; ±4kV L-PE & N-PE	IEC/EN61000-4-5:2014 + A1:2017, Criteria A
	valid for “/EIB” versions: AC Port without Filter: ±2kV L-N; ±4kV L-PE & N-PE	IEC/EN61000-4-5:2014 + A1:2017, Criteria B
Immunity to conducted disturbances, induced by radio-frequency fields	10Vrms (0.15-80MHz)	IEC61000-4-6:2013, Criteria A EN61000-4-6:2014, Criteria A
Power Magnetic Field Immunity	30A/m	IEC61000-4-8:2009, Criteria A EN61000-4-8:2010, Criteria A
Voltage Dips	100% (0.5P, 1.0P); 20%, 30%, 60%	EN61000-4-11:2004 + A1:2017, Criteria A
Voltage Interruptions	100%	EN61000-4-11:2004 + A1:2017, Criteria B
Limits of Voltage Fluctuations & Flicker		EN61000-3-3:2013

Suggested external filter to comply with EN55032 “B” for loads coupled to earth or GND and PELV circuits

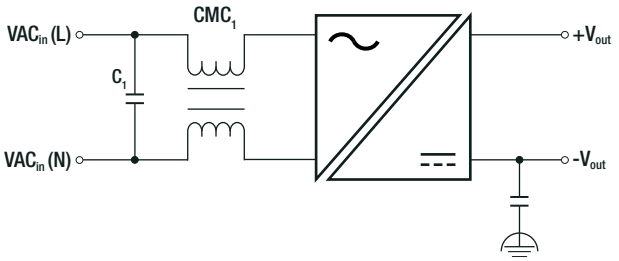

Component List

C_1	CMC_1
0.22µF	25mH

copyright © RECOM Power GmbH, all rights reserved

DIMENSION & PHYSICAL CHARACTERISTICS

Parameter	Type	Value
Materials	case/baseplate (isolated)	plastic, (UL94 V-0)
	potting (THT version only)	silicone, (UL94 V-0)
	PCB	FR4, (UL94 V-0)
Dimension (LxWxH)	THT version	52.5 x 40.0 x 25.5mm 2.06 x 1.57 x 1.0 inch
	"/OIB"	79.0 x 40.8 x 31.0mm 3.11 x 1.60 x 1.22 inch
	"/EIB"	79.0 x 40.8 x 32.0mm 3.11 x 1.60 x 1.26 inch
Weight	THT version	122g typ. 0.27 lbs
	"/OIB"	81g typ. 0.18 lbs
	"/EIB"	91g typ. 0.20 lbs

Dimension Drawing THT-solder mount (mm)

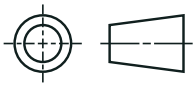

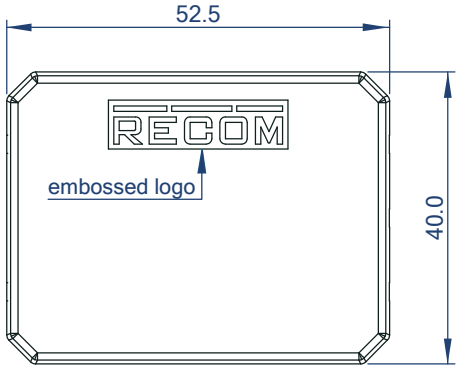

Pinning information [P12]

Pin #	Single
1	VAC in (N)
2	VAC in (L)
4	-Vout
5	+Vout

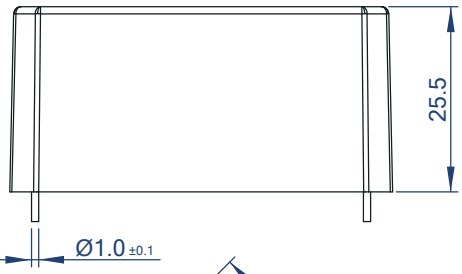

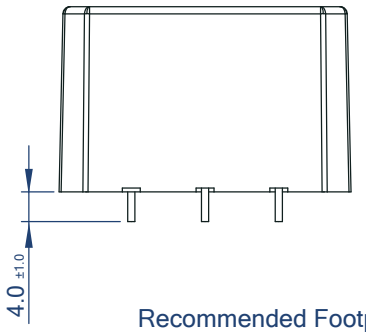

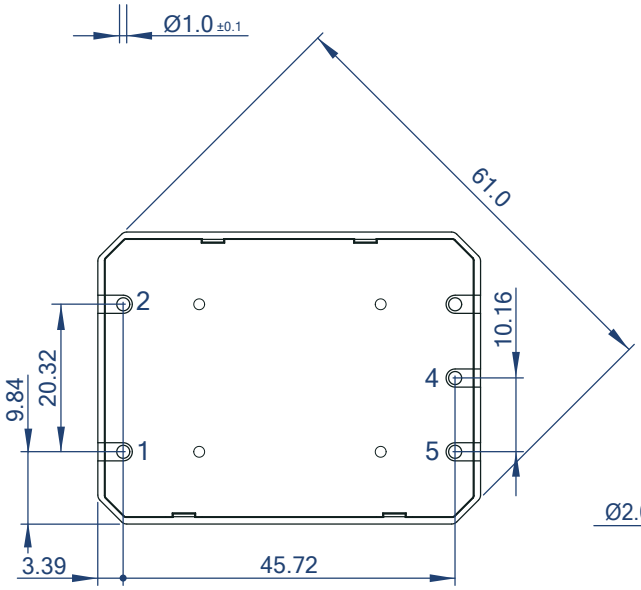

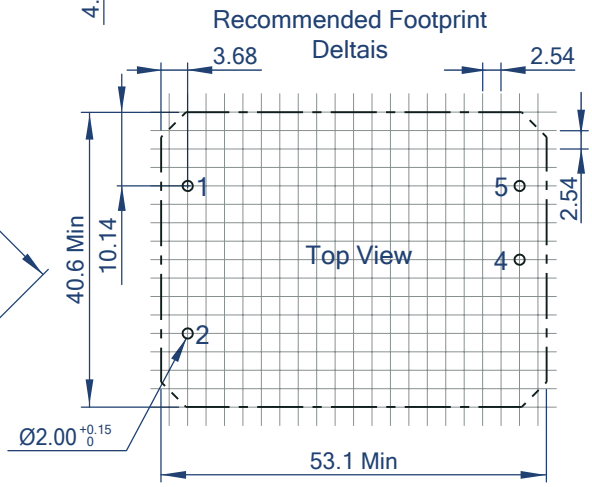

Tolerance:
xx.x= ±0.5mm
xx.xx= ±0.25mm

copyright © RECOM Power GmbH, all rights reserved

DIMENSION & PHYSICAL CHARACTERISTICS

Dimension Drawing "/OIB" (mm)

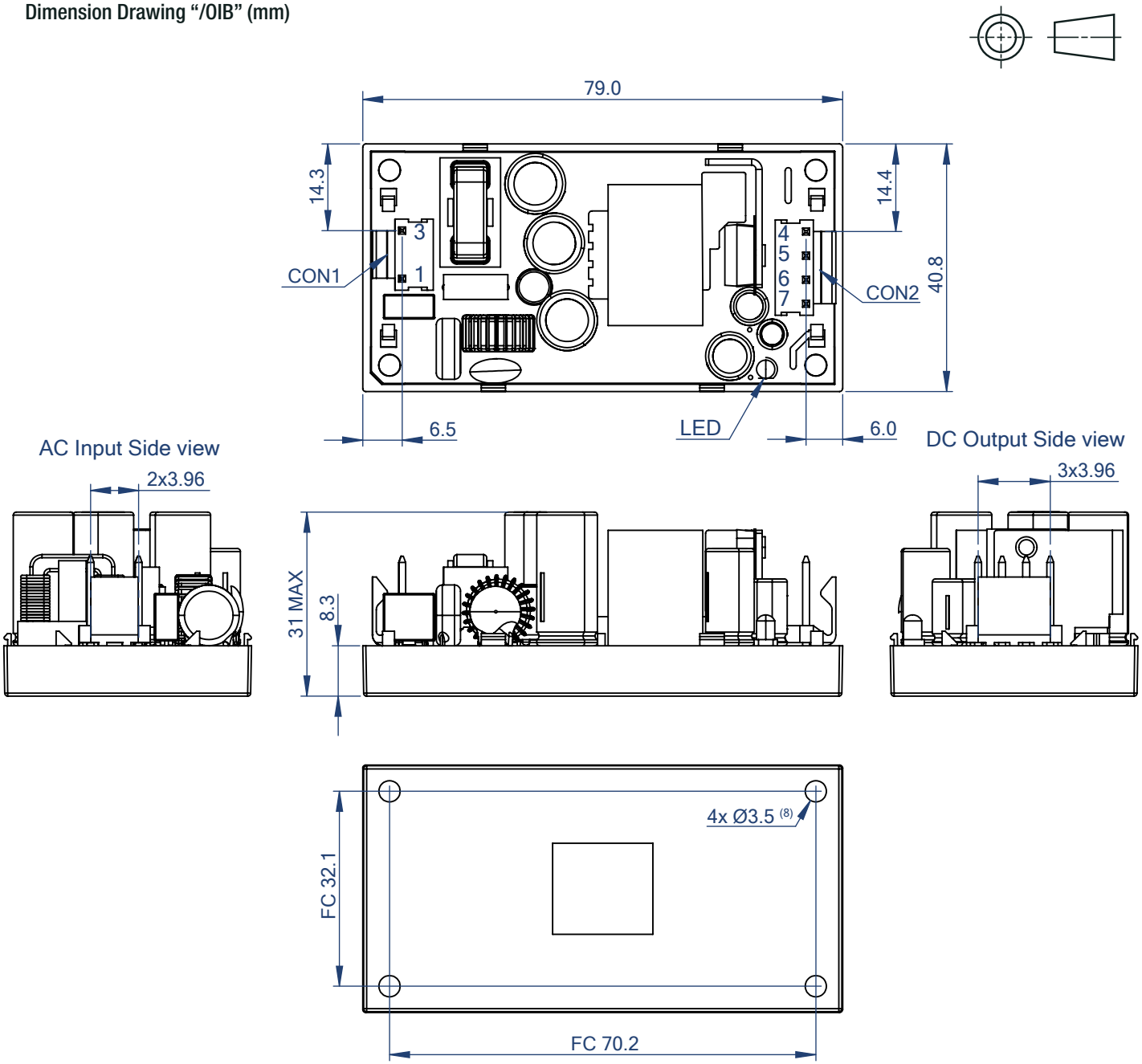

Note8: Secure the device to the mounting surface using 4x M3 screws. Use cylinder head screws only. Countersunk screws are not permitted. Recommended tightening torque= 0.7Nm

Connector Information

AC Input (CON1)

#	Function	Connector
1	VAC in (L)	3 Pins (Pin2 removed)
3	VAC in (N)	with 3.96mm pitch

DC Output (CON2)

#	Function	Connector
4, 5	-Vout	4 Pins
6,7	+Vout	with 3.96mm pitch

FC= Fixing centers

Compatible Connector

Housing	Crimp Terminal
Molex 41695 Series or equivalent	Molex 2478 Series or equivalent

Tolerance: xx.x= ±0.5mm
xx.xx= ±0.25mm

copyright © RECOM Power GmbH, all rights reserved

DIMENSION & PHYSICAL CHARACTERISTICS

Dimension Drawing "/EIB" (mm)

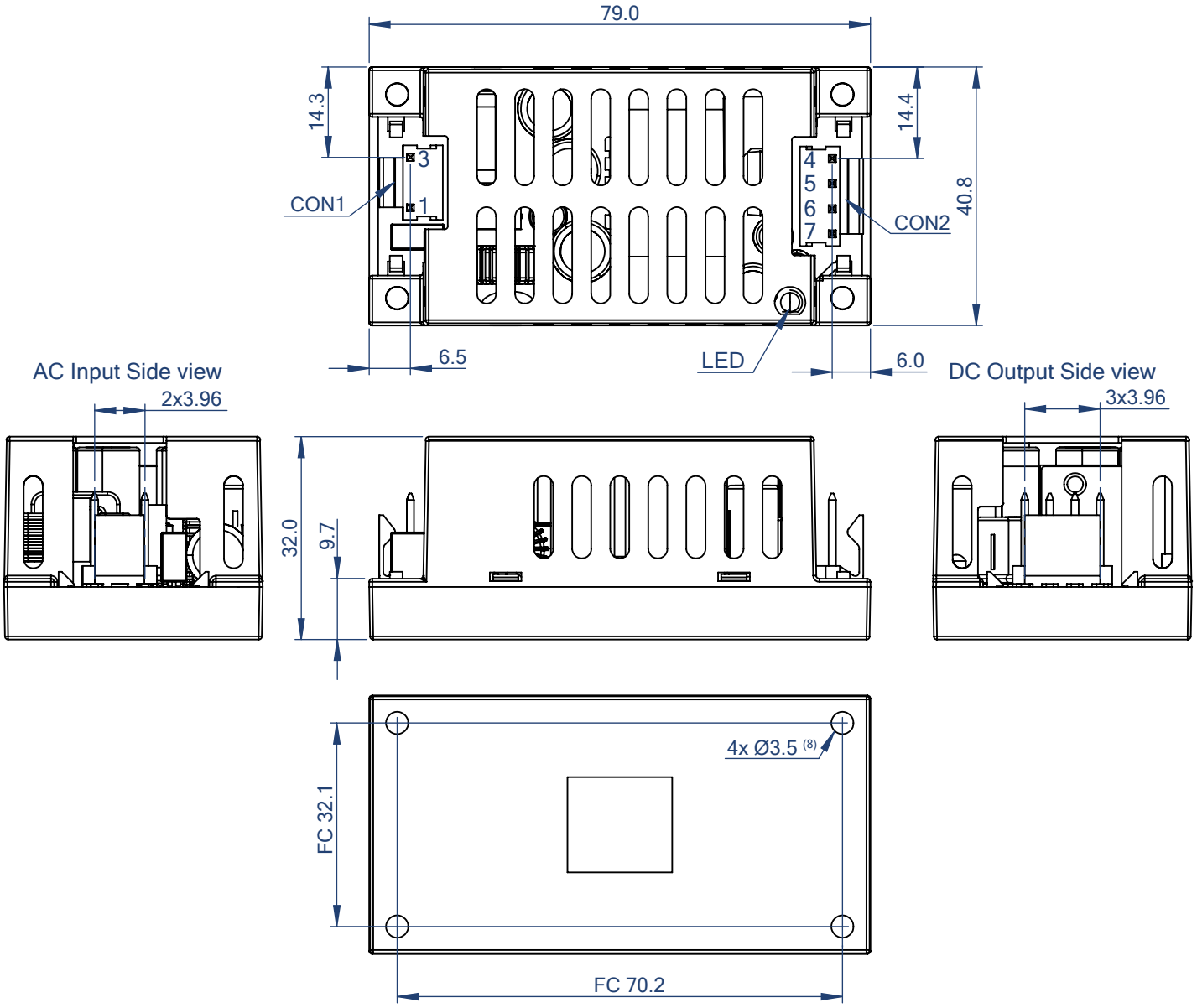

Note8: Secure the device to the mounting surface using 4x M3 screws. Use cylinder head screws only. Countersunk screws are not permitted. Recommended tightening torque= 0.7Nm

Connector Information

AC Input (CON1)

#	Function	Connector
1	VAC in (N)	3 Pins (Pin2 removed)
3	VAC in (L)	with 3.96mm pitch

DC Output (CON2)

#	Function	Connector
4, 5	-Vout	4 Pins
6,7	+Vout	with 3.96mm pitch

FC= Fixing centers

Compatible Connector

Housing	Crimp Terminal
Molex 41695 Series or equivalent	Molex 2478 Series or equivalent

Tolerance: xx.x= ±0.5mm
xx.xx= ±0.25mm

copyright © RECOM Power GmbH, all rights reserved

BLOCK DIAGRAM

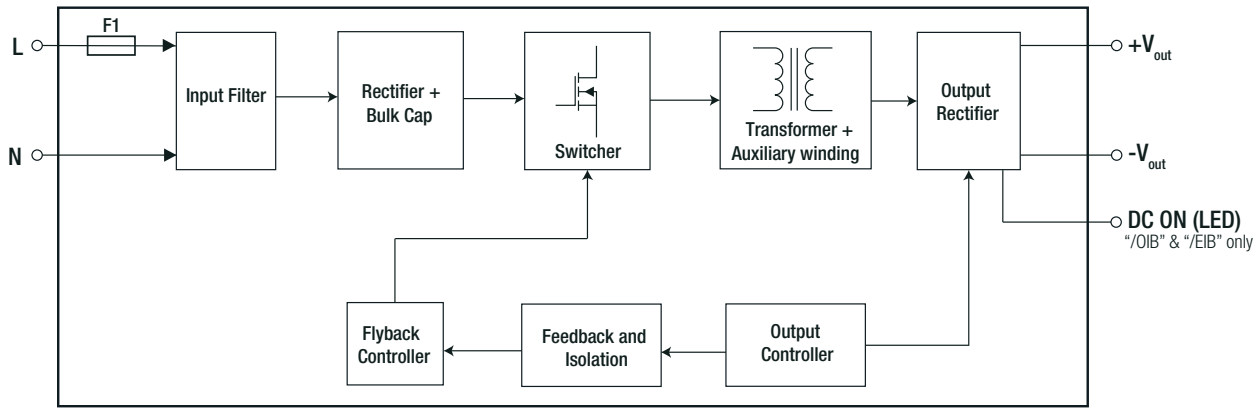

PACKAGING INFORMATION

Parameter	Type		Value
Packaging Dimension (LxWxH)	tube	THT version	490.0 x 56.0 x 40.0mm
	tray	"/OIB" & "/EIB" version	365.0 x 210.0 x 56.0mm
Packaging Quantity	THT version		11pcs
	"/OIB" & "/EIB" version		12pcs
Storage Temperature Range			-40°C to +90°C
Storage Humidity	non-condensing		90% RH max.

The product information and specifications may be subject to changes even without prior written notice.The product has been designed for various applications; its suitability lies in the responsibility of each customer. The products are not authorized for use in safety-critical applications without RECOM's explicit written consent. A safety-critical application is an application where a failure may reasonably be expected to endanger or cause loss of life, inflict bodily harm or damage property. The applicant shall indemnify and hold harmless RECOM, its affiliated companies and its representatives against any damage claims in connection with the unauthorized use of RECOM products in such safety-critical applications.

copyright © RECOM Power GmbH, all rights reserved